- **Wide Operating Voltage Range of 2 V to 6 V**
- **Outputs Can Drive Up To 10 LSTTL Loads**
- **Low Power Consumption, 20-μA Max $I_{CC}$**
- **Typical $t_{pd}$ = 8 ns**
- **±4-mA Output Drive at 5 V**
- **Low Input Current of 1 μA Max**

**SN54HC05 . . . J OR W PACKAGE**
**SN74HC05 . . . D, DB, N, NS, OR PW PACKAGE**
**(TOP VIEW)**

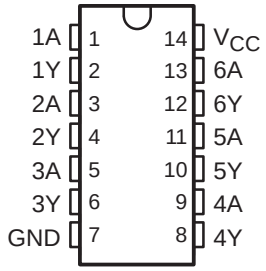


**SN54HC05 . . . FK PACKAGE**
**(TOP VIEW)**

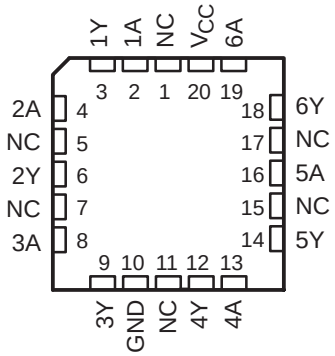


NC – No internal connection

## description/ordering information

The ’HC05 devices contain six independent inverters. They perform the Boolean function $Y = \overline{A}$ in positive logic. The open-drain outputs require pullup resistors to perform correctly. They may be connected to other open-drain outputs to implement active-low wired-OR or active-high wired-AND functions.

**ORDERING INFORMATION**

| $T_A$ | PACKAGE† | | ORDERABLE PART NUMBER | TOP-SIDE MARKING |
|---|---|---|---|---|
| –40°C to 85°C | PDIP – N | Tube of 25 | SN74HC05N | SN74HC05N |
| | SOIC – D | Tube of 50 | SN74HC05D | HC05 |
| | | Reel of 2500 | SN74HC05DR | |
| | | Reel of 250 | SN74HC05DT | |
| | SOP – NS | Reel of 2000 | SN74HC05NSR | HC05 |
| | SSOP – DB | Reel of 2000 | SN74HC05DBR | HC05 |
| | TSSOP – PW | Reel of 2000 | SN74HC05PWR | HC05 |
| | | Reel of 250 | SN74HC05PWT | |
| –55°C to 125°C | CDIP – J | Tube of 25 | SNJ54HC05J | SNJ54HC05J |
| | CFP – W | Tube of 150 | SNJ54HC05W | SNJ54HC05W |
| | LCCC – FK | Tube of 55 | SNJ54HC05FK | SNJ54HC05FK |

† Package drawings, standard packing quantities, thermal data, symbolization, and PCB design guidelines are available at www.ti.com/sc/package.

Please be aware that an important notice concerning availability, standard warranty, and use in critical applications of Texas Instruments semiconductor products and disclaimers thereto appears at the end of this data sheet.

PRODUCTION DATA information is current as of publication date. Products conform to specifications per the terms of Texas Instruments standard warranty. Production processing does not necessarily include testing of all parameters.

Copyright © 2003, Texas Instruments Incorporated

On products compliant to MIL-PRF-38535, all parameters are tested unless otherwise noted. On all other products, production processing does not necessarily include testing of all parameters.

**FUNCTION TABLE**
**(each inverter)**

| INPUT A | OUTPUT Y |
|---|---|
| H | L |
| L | H |

## logic diagram (positive logic)

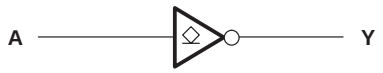


## absolute maximum ratings over operating free-air temperature range (unless otherwise noted)†

Supply voltage range, $V_{CC}$ . . . . . –0.5 V to 7 V
Input clamp current, $I_{IK}$ ($V_I < 0$ or $V_I > V_{CC}$) (see Note 1) . . . . . ±20 mA
Output clamp current, $I_{OK}$ ($V_O < 0$ or $V_O > V_{CC}$) (see Note 1) . . . . . ±20 mA
Continuous output current, $I_O$ ($V_O = 0$ to $V_{CC}$) . . . . . ±25 mA
Continuous current through $V_{CC}$ or GND . . . . . ±50 mA
Package thermal impedance, $\theta_{JA}$ (see Note 2): D package . . . . . 86°C/W
DB package . . . . . 96°C/W
N package . . . . . 80°C/W
NS package . . . . . 76°C/W
PW package . . . . . 113°C/W
Storage temperature range, $T_{stg}$ . . . . . –65°C to 150°C

† Stresses beyond those listed under “absolute maximum ratings” may cause permanent damage to the device. These are stress ratings only, and functional operation of the device at these or any other conditions beyond those indicated under “recommended operating conditions” is not implied. Exposure to absolute-maximum-rated conditions for extended periods may affect device reliability.

NOTES: 1. The input and output voltage ratings may be exceeded if the input and output current ratings are observed.
2. The package thermal impedance is calculated in accordance with JESD 51-7.

## recommended operating conditions (see Note 3)

| | | | SN54HC05 | | | SN74HC05 | | | UNIT |
|---|---|---|---|---|---|---|---|---|---|
| | | | MIN | NOM | MAX | MIN | NOM | MAX | |
| $V_{CC}$ | Supply voltage | | 2 | 5 | 6 | 2 | 5 | 6 | V |
| $V_{IH}$ | High-level input voltage | $V_{CC}$ = 2 V | 1.5 | | | 1.5 | | | V |
| | | $V_{CC}$ = 4.5 V | 3.15 | | | 3.15 | | | |
| | | $V_{CC}$ = 6 V | 4.2 | | | 4.2 | | | |
| $V_{IL}$ | Low-level input voltage | $V_{CC}$ = 2 V | | | 0.5 | | | 0.5 | V |
| | | $V_{CC}$ = 4.5 V | | | 1.35 | | | 1.35 | |
| | | $V_{CC}$ = 6 V | | | 1.8 | | | 1.8 | |
| $V_I$ | Input voltage | | 0 | | $V_{CC}$ | 0 | | $V_{CC}$ | V |
| $V_O$ | Output voltage | | 0 | | $V_{CC}$ | 0 | | $V_{CC}$ | V |
| $\Delta t/\Delta v$ | Input transition rise/fall time | $V_{CC}$ = 2 V | | | 1000 | | | 1000 | ns |
| | | $V_{CC}$ = 4.5 V | | | 500 | | | 500 | |
| | | $V_{CC}$ = 6 V | | | 400 | | | 400 | |
| $T_A$ | Operating free-air temperature | | –55 | | 125 | –40 | | 85 | °C |

NOTE 3: All unused inputs of the device must be held at $V_{CC}$ or GND to ensure proper device operation. Refer to the TI application report, *Implications of Slow or Floating CMOS Inputs*, literature number SCBA004.

## electrical characteristics over recommended operating free-air temperature range (unless otherwise noted)

| PARAMETER | TEST CONDITIONS | | $V_{CC}$ | $T_A$ = 25°C | | | SN54HC05 | | SN74HC05 | | UNIT |
|---|---|---|---|---|---|---|---|---|---|---|---|
| | | | | MIN | TYP | MAX | MIN | MAX | MIN | MAX | |
| $I_{OH}$ | $V_I = V_{IH}$ or $V_{IL}$, $V_O = V_{CC}$ | | 6 V | | 0.01 | 0.5 | | 10 | | 5 | µA |
| $V_{OL}$ | $V_I = V_{IH}$ or $V_{IL}$ | $I_{OL}$ = 20 µA | 2 V | | 0.002 | 0.1 | | 0.1 | | 0.1 | V |
| | | | 4.5 V | | 0.001 | 0.1 | | 0.1 | | 0.1 | |
| | | | 6 V | | 0.001 | 0.1 | | 0.1 | | 0.1 | |
| | | $I_{OL}$ = 4 mA | 4.5 V | | 0.17 | 0.26 | | 0.4 | | 0.33 | |
| | | $I_{OL}$ = 5.2 mA | 6 V | | 0.15 | 0.26 | | 0.4 | | 0.33 | |
| $I_I$ | $V_I = V_{CC}$ or 0 | | 6 V | | ±0.1 | ±100 | | ±1000 | | ±1000 | nA |
| $I_{CC}$ | $V_I = V_{CC}$ or 0, $I_O = 0$ | | 6 V | | | 2 | | 40 | | 20 | µA |
| $C_i$ | | | 2 V to 6 V | | 3 | 10 | | 10 | | 10 | pF |

## switching characteristics over recommended operating free-air temperature range, $C_L$ = 50 pF (unless otherwise noted) (see Figure 1)

| PARAMETER | FROM (INPUT) | TO (OUTPUT) | $V_{CC}$ | $T_A$ = 25°C | | | SN54HC05 | | SN74HC05 | | UNIT |
|---|---|---|---|---|---|---|---|---|---|---|---|
| | | | | MIN | TYP | MAX | MIN | MAX | MIN | MAX | |
| $t_{PLH}$ | A | Y | 2 V | | 60 | 115 | | 175 | | 145 | ns |
| | | | 4.5 V | | 13 | 23 | | 35 | | 29 | |
| | | | 6 V | | 10 | 20 | | 30 | | 25 | |
| $t_{PHL}$ | A | Y | 2 V | | 45 | 85 | | 130 | | 105 | ns |
| | | | 4.5 V | | 9 | 17 | | 26 | | 21 | |
| | | | 6 V | | 8 | 14 | | 22 | | 18 | |
| $t_f$ | | Y | 2 V | | 38 | 75 | | 110 | | 95 | ns |
| | | | 4.5 V | | 8 | 15 | | 22 | | 19 | |
| | | | 6 V | | 6 | 13 | | 19 | | 16 | |

## operating characteristics, $T_A$ = 25°C

| PARAMETER | | TEST CONDITIONS | TYP | UNIT |
|---|---|---|---|---|
| $C_{pd}$ | Power dissipation capacitance per inverter | No load | 20 | pF |

## PARAMETER MEASUREMENT INFORMATION

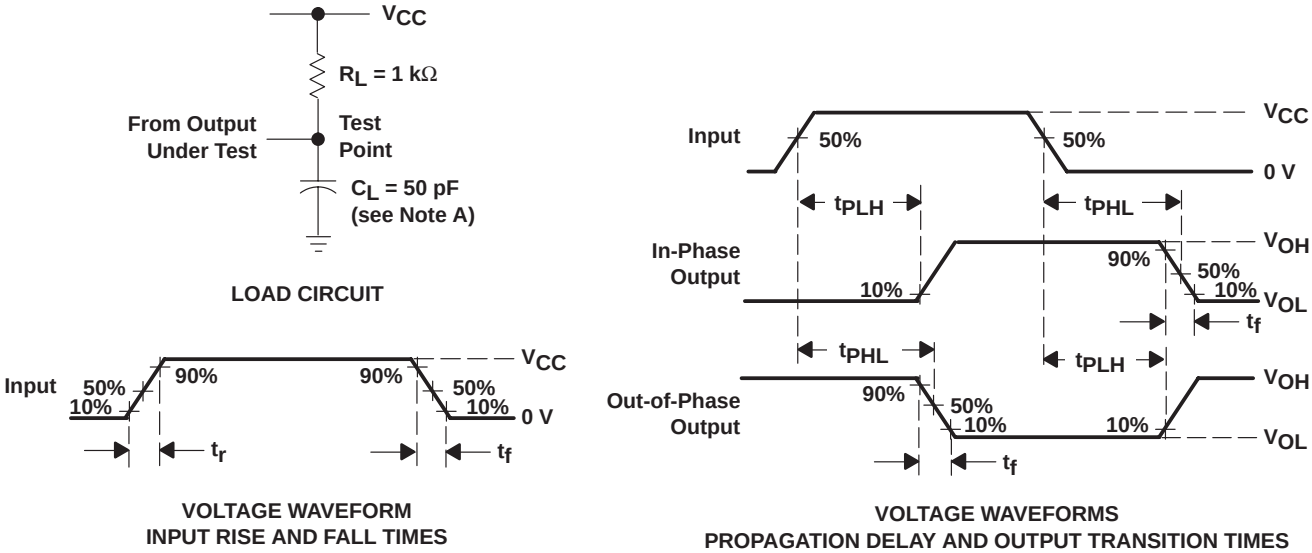


NOTES: A. $C_L$ includes probe and test-fixture capacitance.
B. Phase relationships between waveforms were chosen arbitrarily. All input pulses are supplied by generators having the following characteristics: PRR ≤ 1 MHz, $Z_O$ = 50 Ω, $t_r$ = 6 ns, $t_f$ = 6 ns.
C. The outputs are measured one at a time with one input transition per measurement.

**Figure 1. Load Circuit and Voltage Waveforms**

J (R–GDIP–T**) CERAMIC DUAL IN–LINE PACKAGE

14 LEADS SHOWN

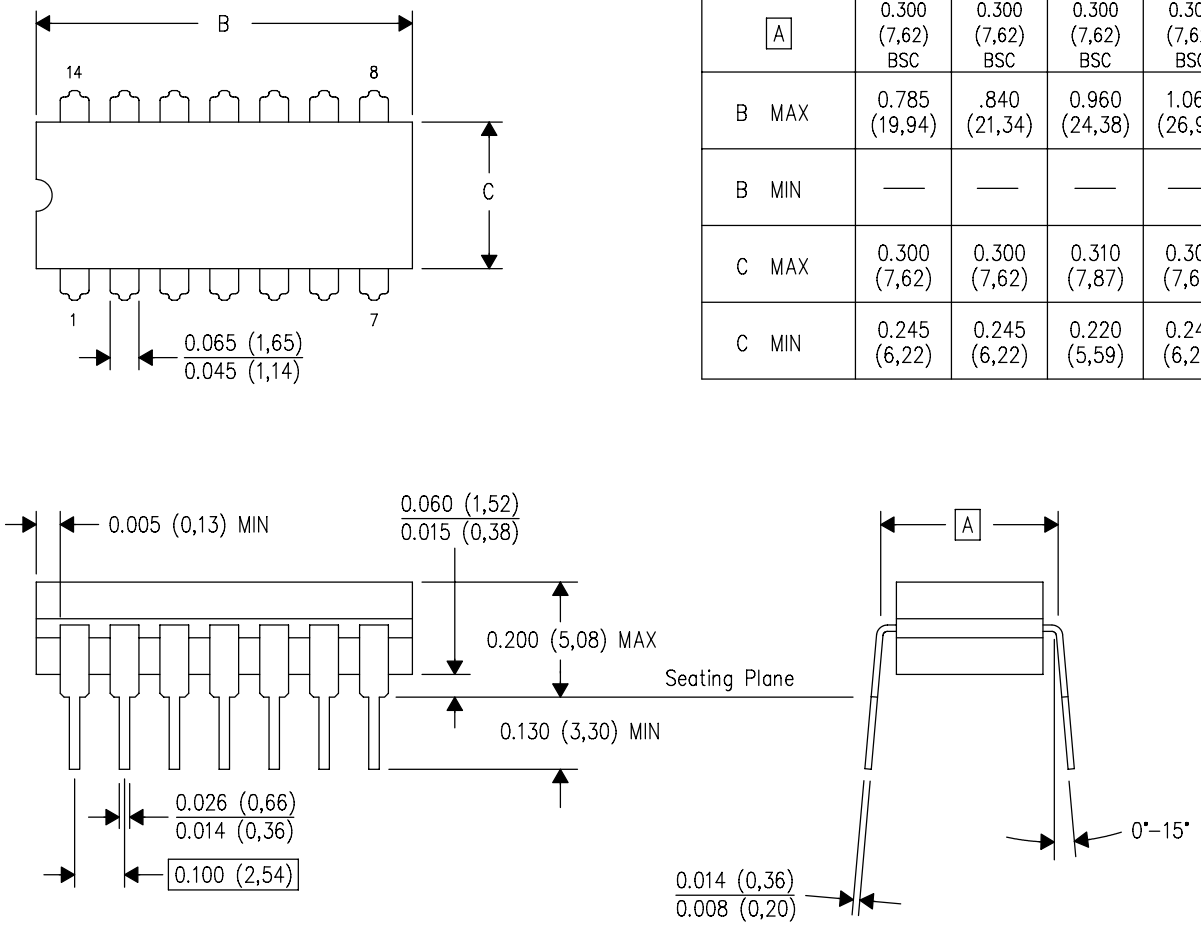


| DIM \ PINS ** | 14 | 16 | 18 | 20 |
|---|---|---|---|---|
| A | 0.300 (7,62) BSC | 0.300 (7,62) BSC | 0.300 (7,62) BSC | 0.300 (7,62) BSC |
| B MAX | 0.785 (19,94) | .840 (21,34) | 0.960 (24,38) | 1.060 (26,92) |
| B MIN | — | — | — | — |
| C MAX | 0.300 (7,62) | 0.300 (7,62) | 0.310 (7,87) | 0.300 (7,62) |
| C MIN | 0.245 (6,22) | 0.245 (6,22) | 0.220 (5,59) | 0.245 (6,22) |

4040083/F 03/03

NOTES:
- A. All linear dimensions are in inches (millimeters).
- B. This drawing is subject to change without notice.
- C. This package is hermetically sealed with a ceramic lid using glass frit.
- D. Index point is provided on cap for terminal identification only on press ceramic glass frit seal only.
- E. Falls within MIL STD 1835 GDIP1–T14, GDIP1–T16, GDIP1–T18 and GDIP1–T20.

## FK (S-CQCC-N**)

## LEADLESS CERAMIC CHIP CARRIER

**28 TERMINAL SHOWN**

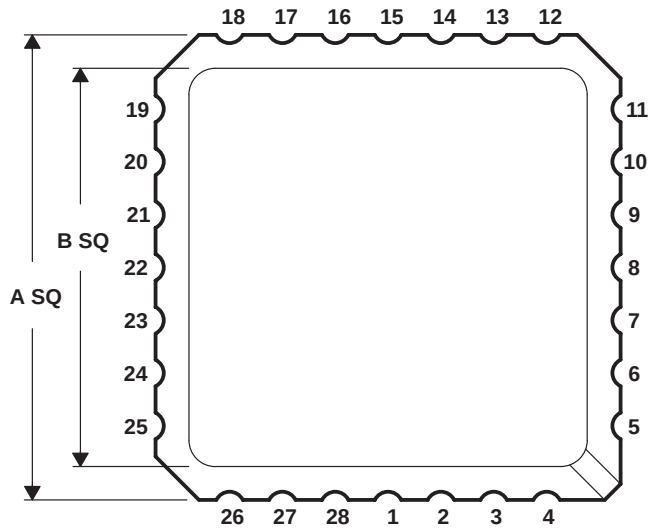


| NO. OF TERMINALS ** | A | | B | |
|---|---|---|---|---|
| | MIN | MAX | MIN | MAX |
| 20 | 0.342 (8,69) | 0.358 (9,09) | 0.307 (7,80) | 0.358 (9,09) |
| 28 | 0.442 (11,23) | 0.458 (11,63) | 0.406 (10,31) | 0.458 (11,63) |
| 44 | 0.640 (16,26) | 0.660 (16,76) | 0.495 (12,58) | 0.560 (14,22) |
| 52 | 0.739 (18,78) | 0.761 (19,32) | 0.495 (12,58) | 0.560 (14,22) |
| 68 | 0.938 (23,83) | 0.962 (24,43) | 0.850 (21,6) | 0.858 (21,8) |
| 84 | 1.141 (28,99) | 1.165 (29,59) | 1.047 (26,6) | 1.063 (27,0) |

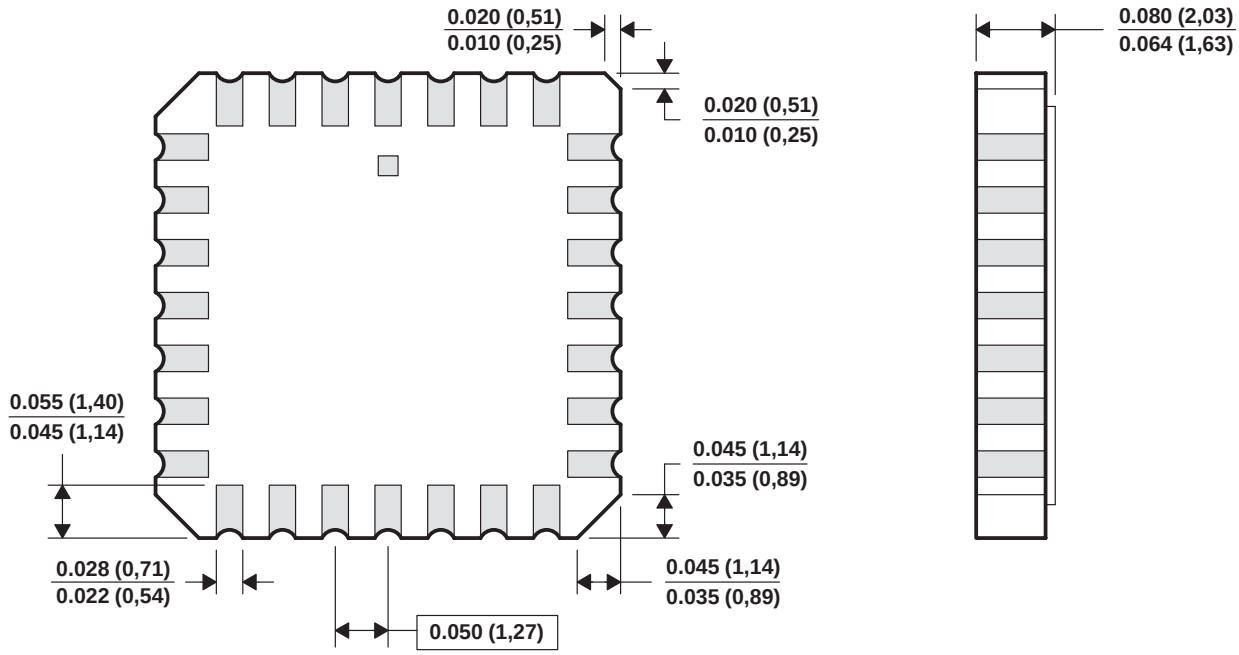


4040140/D 10/96

NOTES:
A. All linear dimensions are in inches (millimeters).
B. This drawing is subject to change without notice.
C. This package can be hermetically sealed with a metal lid.
D. The terminals are gold plated.
E. Falls within JEDEC MS-004

## N (R–PDIP–T**) PLASTIC DUAL–IN–LINE PACKAGE

16 PINS SHOWN

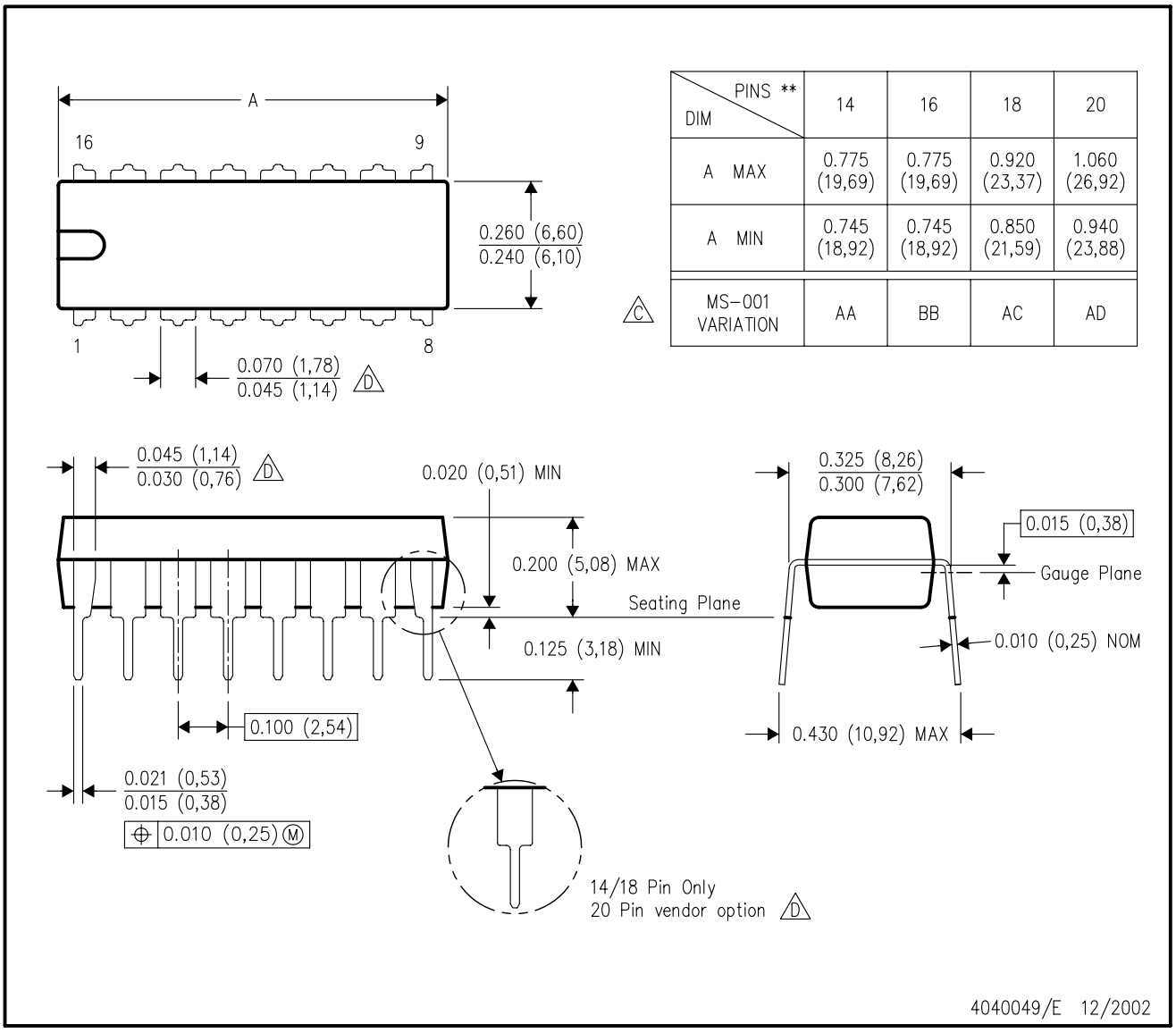


| DIM \ PINS ** | 14 | 16 | 18 | 20 |
|---|---|---|---|---|
| A MAX | 0.775 (19,69) | 0.775 (19,69) | 0.920 (23,37) | 1.060 (26,92) |
| A MIN | 0.745 (18,92) | 0.745 (18,92) | 0.850 (21,59) | 0.940 (23,88) |
| MS–001 VARIATION (C) | AA | BB | AC | AD |

NOTES:
A. All linear dimensions are in inches (millimeters).
B. This drawing is subject to change without notice.
C. Falls within JEDEC MS–001, except 18 and 20 pin minimum body length (Dim A).
D. The 20 pin end lead shoulder width is a vendor option, either half or full width.

## D (R–PDSO–G14) PLASTIC SMALL–OUTLINE PACKAGE

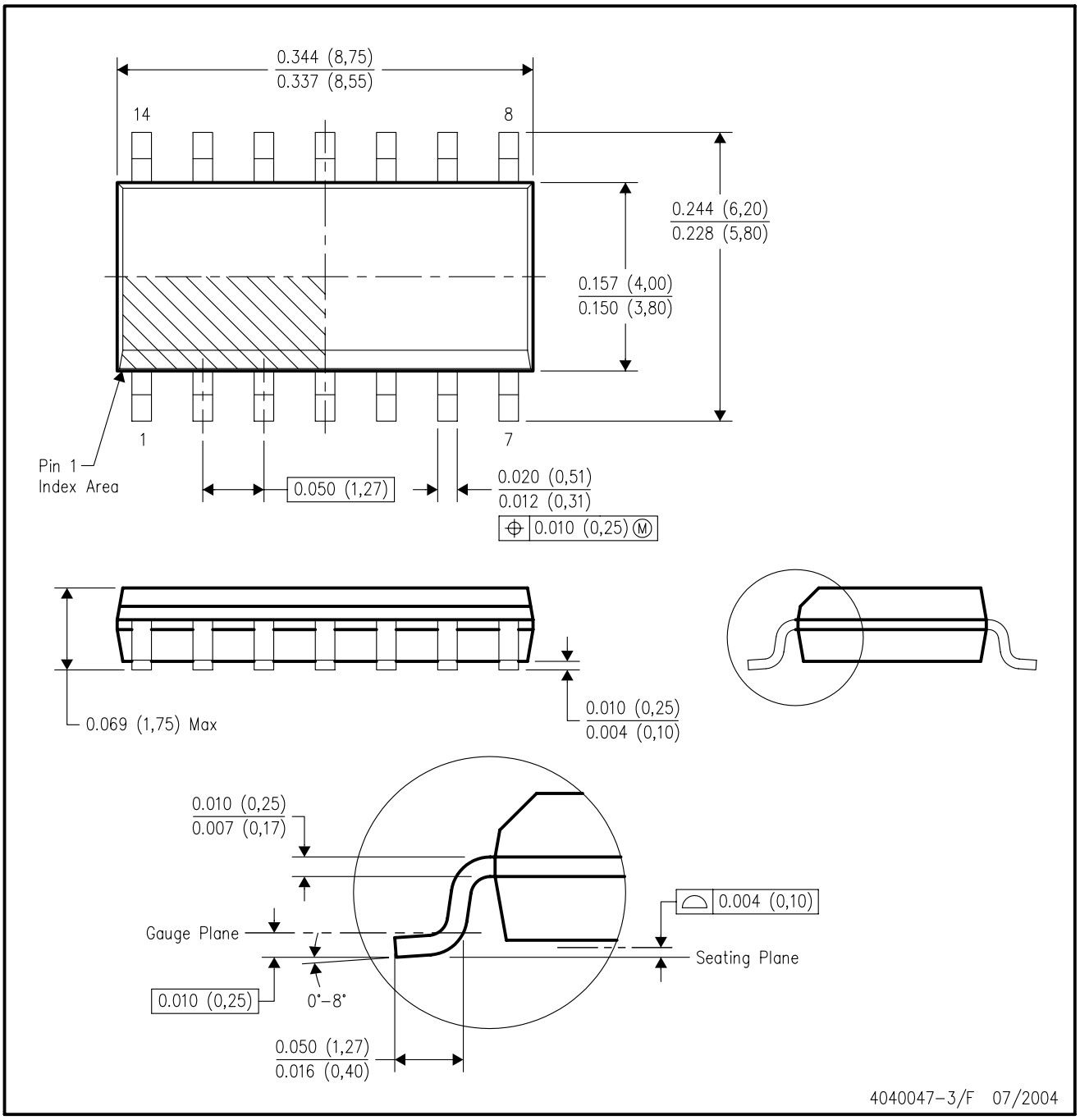


NOTES:
A. All linear dimensions are in inches (millimeters).
B. This drawing is subject to change without notice.
C. Body dimensions do not include mold flash or protrusion not to exceed 0.006 (0,15).
D. Falls within JEDEC MS–012 variation AB.

## MECHANICAL DATA

**NS (R-PDSO-G**)** **PLASTIC SMALL-OUTLINE PACKAGE**

**14-PINS SHOWN**

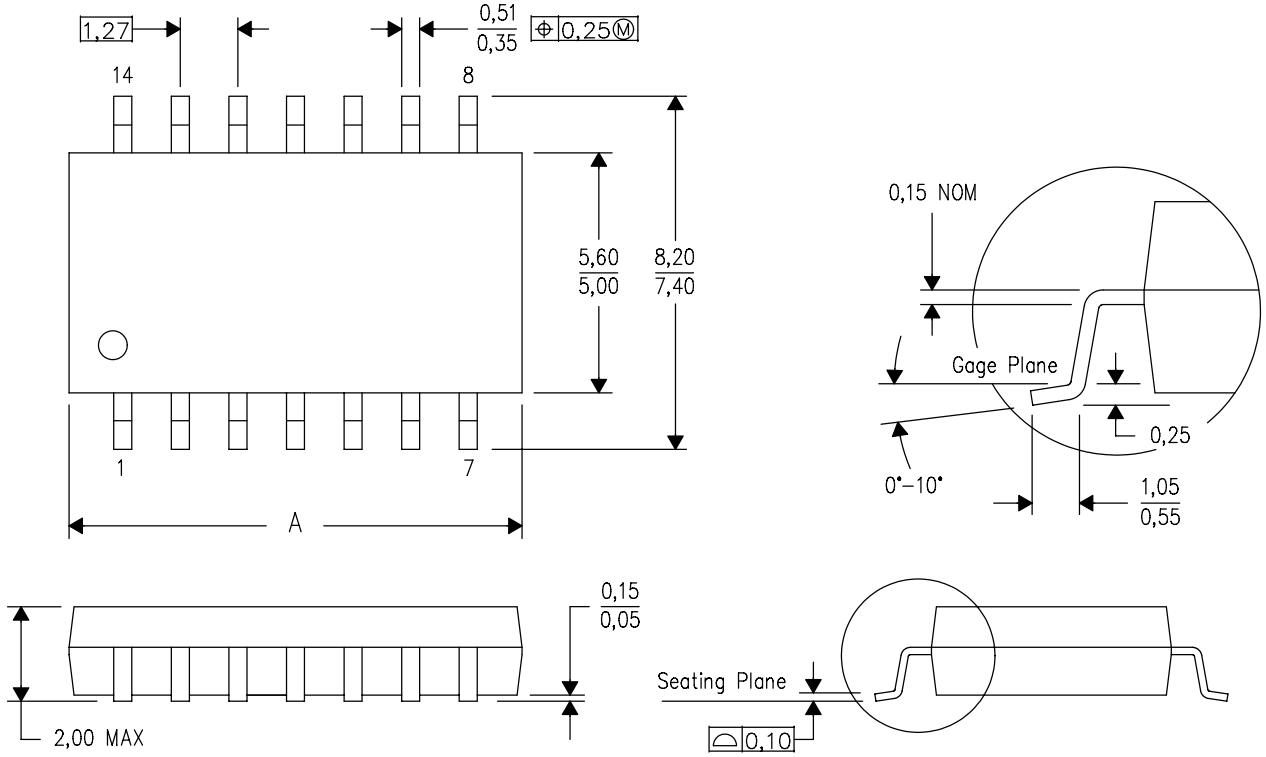


| DIM \ PINS ** | 14 | 16 | 20 | 24 |
|---|---|---|---|---|
| A MAX | 10,50 | 10,50 | 12,90 | 15,30 |
| A MIN | 9,90 | 9,90 | 12,30 | 14,70 |

4040062/C 03/03

NOTES:
A. All linear dimensions are in millimeters.
B. This drawing is subject to change without notice.
C. Body dimensions do not include mold flash or protrusion, not to exceed 0,15.

**DB (R-PDSO-G**)** **PLASTIC SMALL-OUTLINE**

**28 PINS SHOWN**

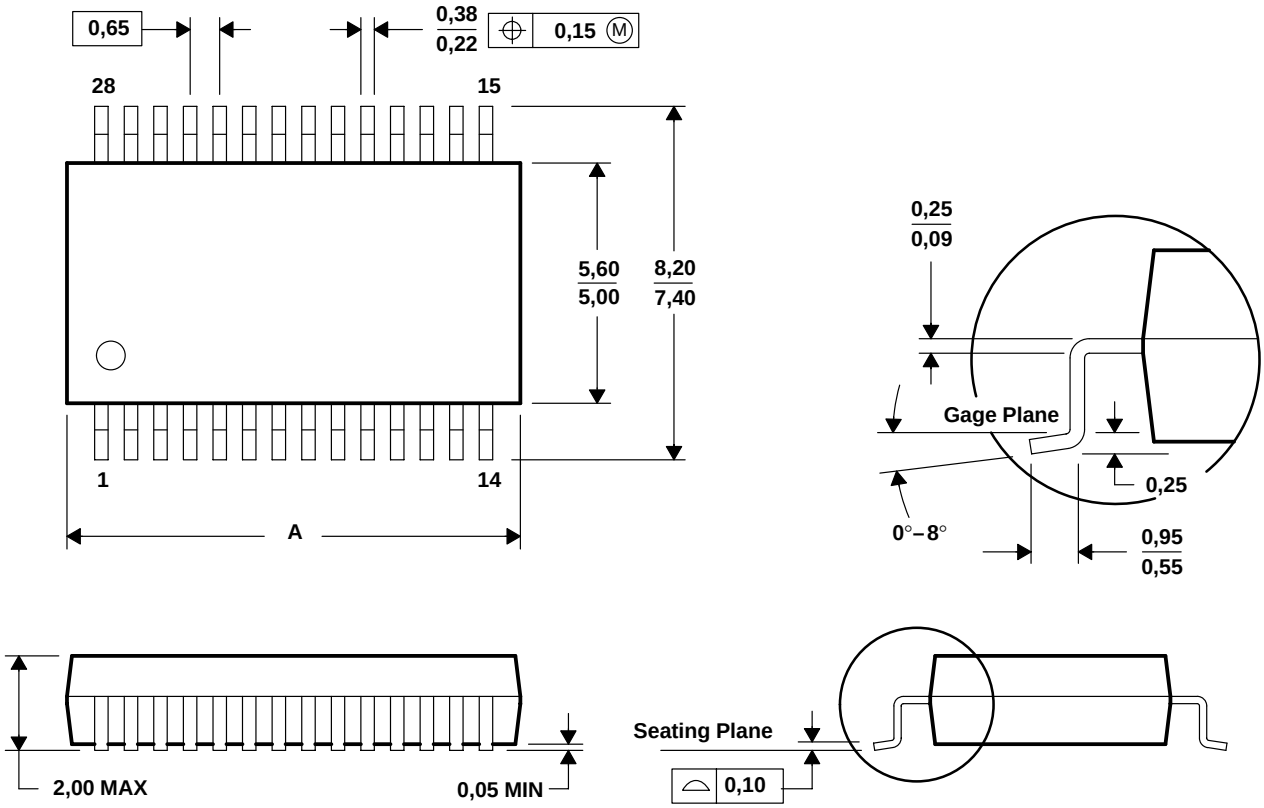


| DIM \ PINS ** | 14 | 16 | 20 | 24 | 28 | 30 | 38 |
|---|---|---|---|---|---|---|---|
| A MAX | 6,50 | 6,50 | 7,50 | 8,50 | 10,50 | 10,50 | 12,90 |
| A MIN | 5,90 | 5,90 | 6,90 | 7,90 | 9,90 | 9,90 | 12,30 |

**4040065 /E 12/01**

NOTES: A. All linear dimensions are in millimeters.
B. This drawing is subject to change without notice.
C. Body dimensions do not include mold flash or protrusion not to exceed 0,15.
D. Falls within JEDEC MO-150

**PW (R-PDSO-G**)** **PLASTIC SMALL-OUTLINE PACKAGE**

**14 PINS SHOWN**

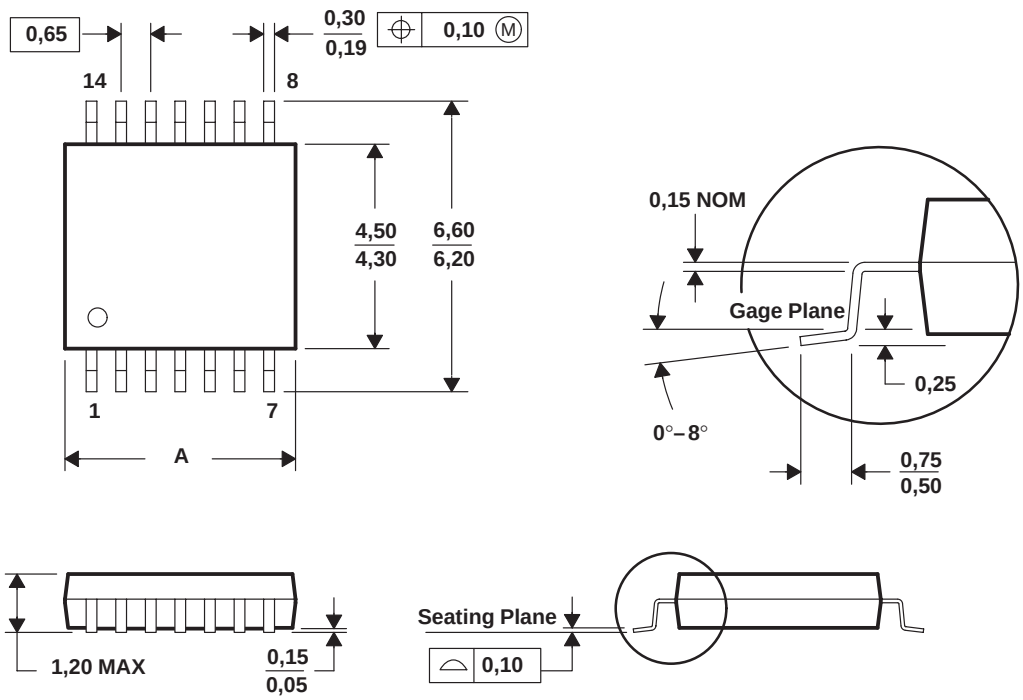


| DIM \ PINS ** | 8 | 14 | 16 | 20 | 24 | 28 |
|---|---|---|---|---|---|---|
| A MAX | 3,10 | 5,10 | 5,10 | 6,60 | 7,90 | 9,80 |
| A MIN | 2,90 | 4,90 | 4,90 | 6,40 | 7,70 | 9,60 |

**4040064/F 01/97**

NOTES: A. All linear dimensions are in millimeters.
B. This drawing is subject to change without notice.
C. Body dimensions do not include mold flash or protrusion not to exceed 0,15.
D. Falls within JEDEC MO-153

## IMPORTANT NOTICE

Texas Instruments Incorporated and its subsidiaries (TI) reserve the right to make corrections, modifications, enhancements, improvements, and other changes to its products and services at any time and to discontinue any product or service without notice. Customers should obtain the latest relevant information before placing orders and should verify that such information is current and complete. All products are sold subject to TI's terms and conditions of sale supplied at the time of order acknowledgment.

TI warrants performance of its hardware products to the specifications applicable at the time of sale in accordance with TI's standard warranty. Testing and other quality control techniques are used to the extent TI deems necessary to support this warranty. Except where mandated by government requirements, testing of all parameters of each product is not necessarily performed.

TI assumes no liability for applications assistance or customer product design. Customers are responsible for their products and applications using TI components. To minimize the risks associated with customer products and applications, customers should provide adequate design and operating safeguards.

TI does not warrant or represent that any license, either express or implied, is granted under any TI patent right, copyright, mask work right, or other TI intellectual property right relating to any combination, machine, or process in which TI products or services are used. Information published by TI regarding third-party products or services does not constitute a license from TI to use such products or services or a warranty or endorsement thereof. Use of such information may require a license from a third party under the patents or other intellectual property of the third party, or a license from TI under the patents or other intellectual property of TI.

Reproduction of information in TI data books or data sheets is permissible only if reproduction is without alteration and is accompanied by all associated warranties, conditions, limitations, and notices. Reproduction of this information with alteration is an unfair and deceptive business practice. TI is not responsible or liable for such altered documentation.

Resale of TI products or services with statements different from or beyond the parameters stated by TI for that product or service voids all express and any implied warranties for the associated TI product or service and is an unfair and deceptive business practice. TI is not responsible or liable for any such statements.

Following are URLs where you can obtain information on other Texas Instruments products and application solutions:

| **Products** | | **Applications** | |
|---|---|---|---|
| Amplifiers | amplifier.ti.com | Audio | www.ti.com/audio |
| Data Converters | dataconverter.ti.com | Automotive | www.ti.com/automotive |
| DSP | dsp.ti.com | Broadband | www.ti.com/broadband |
| Interface | interface.ti.com | Digital Control | www.ti.com/digitalcontrol |
| Logic | logic.ti.com | Military | www.ti.com/military |
| Power Mgmt | power.ti.com | Optical Networking | www.ti.com/opticalnetwork |
| Microcontrollers | microcontroller.ti.com | Security | www.ti.com/security |
| | | Telephony | www.ti.com/telephony |
| | | Video & Imaging | www.ti.com/video |
| | | Wireless | www.ti.com/wireless |

Mailing Address: Texas Instruments
Post Office Box 655303 Dallas, Texas 75265

Copyright © 2004, Texas Instruments Incorporated